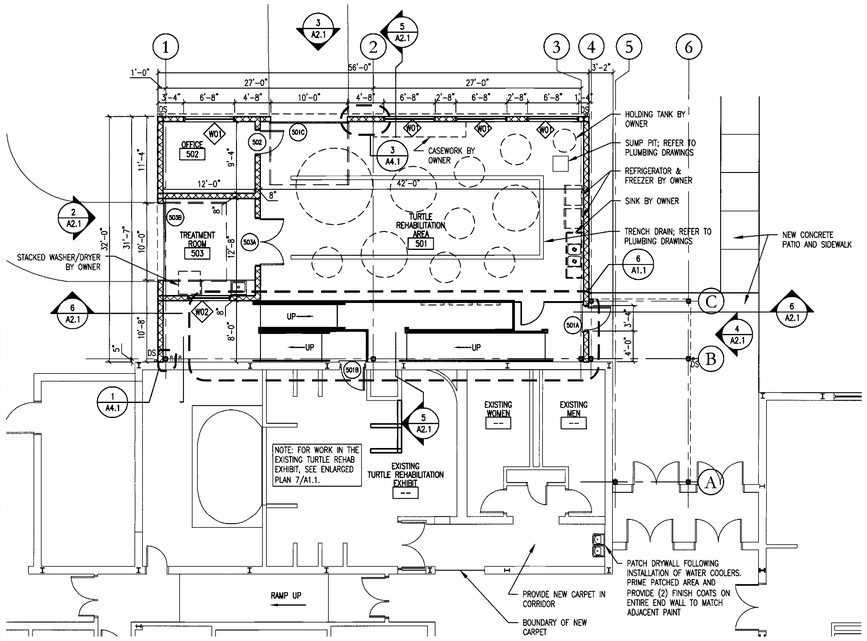

1 A1.1 FLOOR PLAN 1/8" = 1'-0"

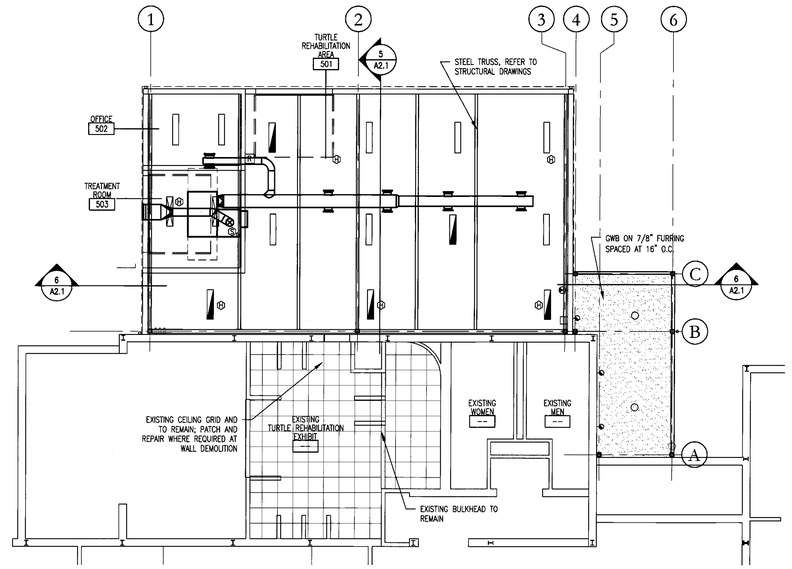

2 A1.1 REFLECTED CEILING PLAN 1/8" = 1'-0"

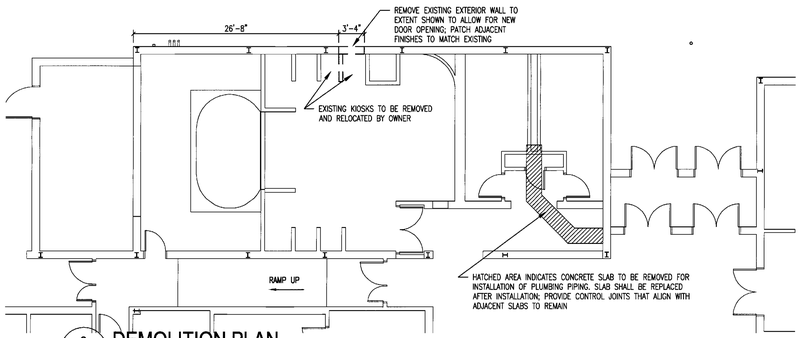

3 A1.1 DEMOLITION PLAN 1/8" = 1'-0"

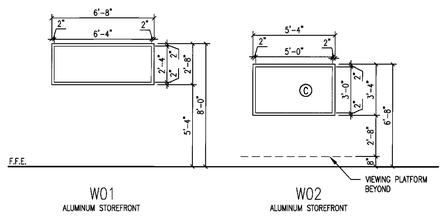

4 A1.1 WINDOW TYPES 1/4" = 1'-0"

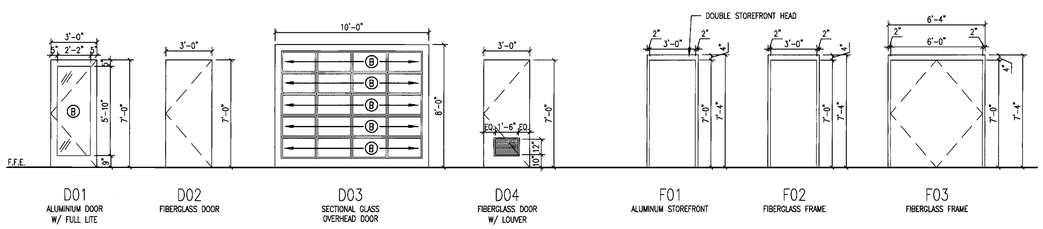

5 A1.1 DOOR & FRAME TYPES 1/4" = 1'-0"

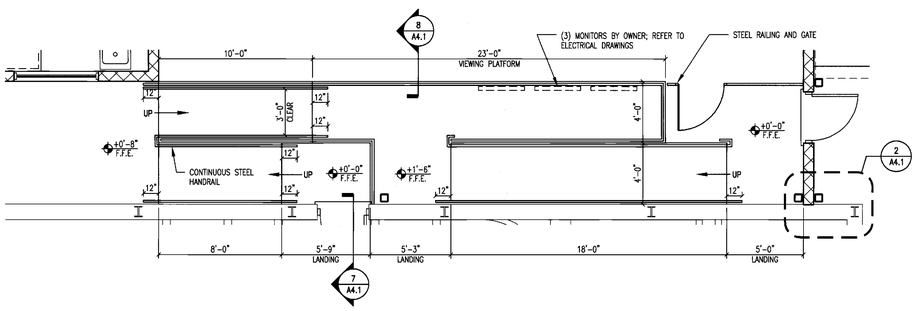

6 A1.1 ENLARGED PLAN @ RAMPS 1/4" = 1'-0"

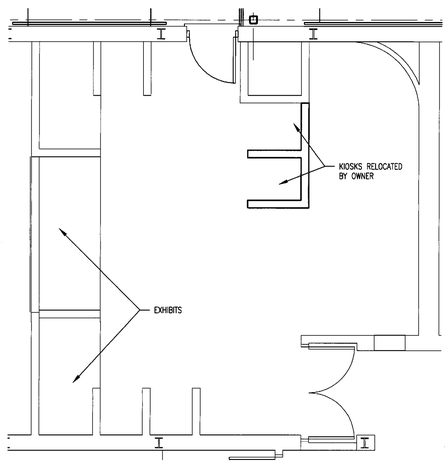

7 A1.1 ENLARGED PLAN @ EXISTING EXHIBIT 1/4" = 1'-0"

GENERAL LEGEND

SYMBOL	DESCRIPTION	SYMBOL	DESCRIPTION
D#	INDICATES DOOR TYPE. REFER TO SHEET A3.1 FOR ADDITIONAL INFORMATION REGARDING ASSEMBLY AND HARDWARE TYPES.	FE	INDICATES FIRE EXTINGUISHER ON BRACKET
W#	INDICATES WINDOW TYPE. REFER TO SHEET A3.1 FOR ADDITIONAL INFORMATION REGARDING ASSEMBLY AND GLASS TYPES.		

PARTITION TYPES

	EXTERIOR WALL; REFER TO EXTERIOR WALL SECTIONS FOR COMPONENTS.		CMU WALL

PARTITION MATERIALS & CONSTRUCTION NOTES

TYPICAL PARTITIONS:

1. TYPICAL INTERIOR PARTITION – UNLESS OTHERWISE NOTED, ALL INTERIOR PARTITIONS SHALL BE 8" CMU BLOCK. TERMINATE AT 10'-0" AFF. REFER TO STRUCTURAL DRAWINGS FOR REINFORCING AND BRACING.

PARTITION NOTES:

1. INSTALL FIRE EXTINGUISHERS AND CABINETS AS SHOWN ON PLAN. FINAL LOCATIONS TO BE APPROVED BY FIRE MARSHAL.

CEILING LEGEND

SYMBOL	DESCRIPTION	SYMBOL	DESCRIPTION
	2X2 LAY-IN ACOUSTICAL TILE IN SUSPENDED GRID		EMERGENCY EGRESS LIGHTING
	GWB CEILINGS AND SOFFITS. PROVIDE MOISTURE RESISTANT GWB AT TOILETS AND AT EXTERIOR LOCATIONS.		SUSPENDED VAPORTIGHT FLUORESCENT
	EXPOSED STRUCTURE, PAINTED		COMPACT FLUORESCENT CYLINDER
	SMOKE DETECTORS	F	FIRE ALARM NOTIFICATION APPLIANCES
	HEAT DETECTORS		CEILING MTD. EXIT LIGHT
	SPRINKLER HEADS		SUPPLY DIFFUSER
	RECESSED 2 x 4 FLUORESCENT ACRYLIC LENS		RETURN GRILLE
	CEILING MOUNTED OCCUPANCY SENSOR		EXHAUST GRILLE

CEILING NOTES

1. THE ARCHITECTURAL REFLECTED CEILING PLAN IS PROVIDED FOR GENERAL COORDINATION OF CEILING ITEMS PROVIDED BY THE MECHANICAL AND ELECTRICAL CONTRACTORS. MINOR INCONSISTENCIES IN DESIGNATIONS OR INADVERTENT OMISSIONS ON THE REFLECTED CEILING PLANS DO NOT CONSTITUTE DELETION OF ANY ITEM PROVIDED BY THE OTHER CONTRACTORS. THE MECHANICAL AND ELECTRICAL DRAWINGS SHALL DICTATE THE SCOPE OF WORK PROVIDED BY THOSE CONTRACTORS.
2. REFER TO ROOM FINISH SCHEDULE AND BUILDING AND/OR WALL SECTIONS FOR CEILING TYPES, HEIGHTS, ETC.
3. REFER TO APPROPRIATE FLOOR PLAN FOR ROOM DIMENSIONS.
4. THE GENERAL CONTRACTOR SHALL PAINT ALL UNFINISHED MISCELLANEOUS METAL OBJECTS AND EXPOSED STEEL LINTELS AT ALL OPENINGS. COLORS TO BE SELECTED.
5. REFER TO ELECTRICAL DRAWINGS FOR LIGHTING PLAN.

GLASS SCHEDULE

A	1" TINTED, INSULATING TEMPERED GLASS
B	5/8" TINTED, INSULATING TEMPERED GLASS
C	1/4" CLEAR TEMPERED GLASS

DOOR/WINDOW ELEVATION NOTES

1. UNLESS OTHERWISE NOTED, ALL GLASS SHALL BE TYPE A.
2. ALL GLASS WITHIN 1'-4" OF FLOOR, ADJACENT TO DOORS AND LOCATED IN DOORS MUST BE TEMPERED.
3. REFER TO FLOOR PLANS FOR RATED WALLS. ALL DOORS AND FRAMES IN RATED WALLS SHALL CARRY APPROPRIATE RATING TO MATCH WALL.

DOOR AND FRAME SCHEDULE

NUMBER	DOOR TYPE	DOOR SIZE WD	DOOR SIZE HGT	DOOR MATL	FRAME TYPE	FRAME MATL	FIRE RATING LABEL	HARDWARE	REMARKS
501A	D01	3'-0"	7'-0"	ALUM	F01	ALUM	--	1	--
501B	D01	3'-0"	7'-0"	ALUM	F01	ALUM	--	3	--
501C	D03	10'-0"	8'-0"	--	--	--	--	2	OVERHEAD DOOR
502	D02	3'-0"	7'-0"	FG	F02	FG	--	6	--
503A	D02	6'-0"	7'-0"	FG	F03	FG	--	5	PAIR DOORS
503B	D03	10'-0"	8'-0"	--	--	--	--	2	OVERHEAD DOOR

ROOM FINISH SCHEDULE

ROOM NO.	ROOM NAME	FLOOR	BASE	WALL	CEILING MATL	CEILING HEIGHT	REMARKS
501	TURTLE REHABILITATION AREA	CONC/S	--	P	EXP/P	12'-0"	--
502	OFFICE	CONC/S	--	P	EXP/P	12'-0"	--
503	TREATMENT ROOM	CONC/S	--	P	EXP/P	12'-0"	--

FINISH LEGEND

ACT	ACOUSTICAL CEILING TILE	P	PAINT	S	SEALER FOR CONCRETE
CONC	CONCRETE	PLAM	PLASTIC LAMINATE	SS	STAINLESS STEEL
EXP	EXPOSED	R	RESILIENT BASE	SSM	SOLID SURFACE MATERIAL
GYP	GYPSUM WALL BOARD				

FINISH NOTES:

1. SEE CEILING PLANS FOR CEILING MATERIAL LOCATION AND VARYING HEIGHTS.
2. ALL HANDRAILS ARE TO BE PAINTED P3.
3. ALL HOLLOW METAL FRAMES ARE TO BE PAINTED P2.
4. IN AREAS WITH EXPOSED CEILINGS, ALL WALLS SHALL BE PAINTED TO THE STRUCTURE ABOVE.

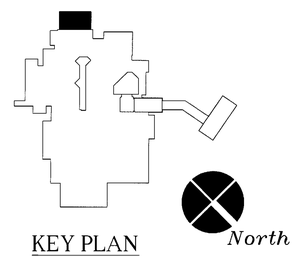

NORTH CAROLINA AQUARIUM On Roanoke Island

ROANOKE ISLAND AQUARIUM TURTLE REHABILITATION CENTER

374 AIRPORT ROAD
MANTEO, NORTH CAROLINA 27954

COMPLETE FACILITIES SOLUTIONS

MOSER MAYER PHOENIX ASSOCIATES, PA

326 E Market Street
Suite 200
Greensboro, N.C. 27401
Telephone 336-373-9800
Fax 336-373-0677

4-13-12

THIS DRAWING IS THE PROPERTY OF MOSER MAYER PHOENIX ASSOCIATES, P.A. AND IS NOT TO BE COPIED OR REPRODUCED IN PART OR WHOLE WITHOUT PERMISSION.

SCO ID# 10-08584-01A

REVISIONS

NO.	DATE	DESCRIPTION

DATE	04-13-2012
PROJECT NUMBER	11007.01
SCALE	AS NOTED
DRAWN BY	EKH
CHECKED BY	JAC

FLOOR PLAN, REFLECTED CEILING PLAN & SCHEDULES

A1.1

Published in JBuild

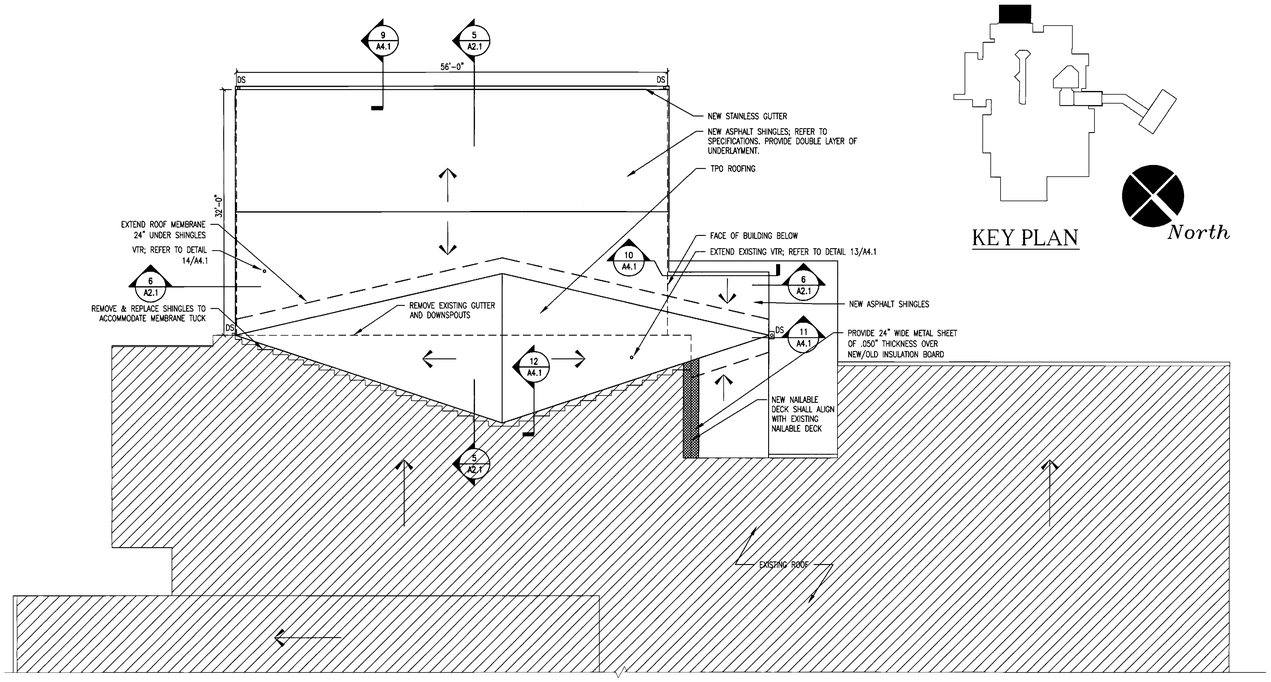

1 A2.1 **ROOF PLAN**
1/8" = 1'-0"

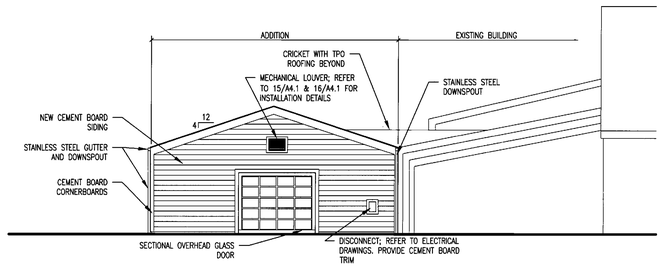

2 A2.1 **BUILDING ELEVATION**
1/8" = 1'-0"

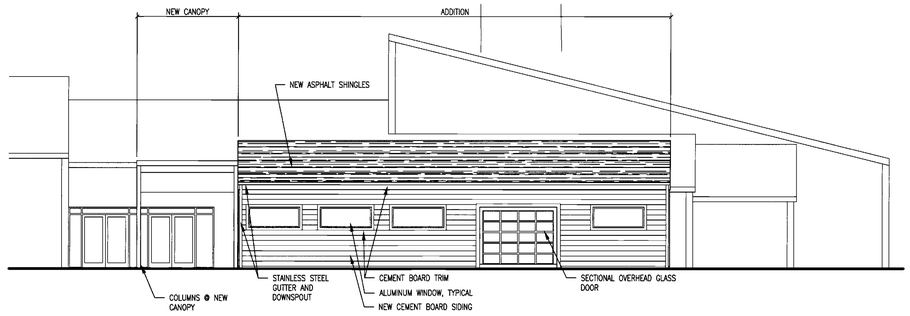

3 A2.1 **BUILDING ELEVATION**
1/8" = 1'-0"

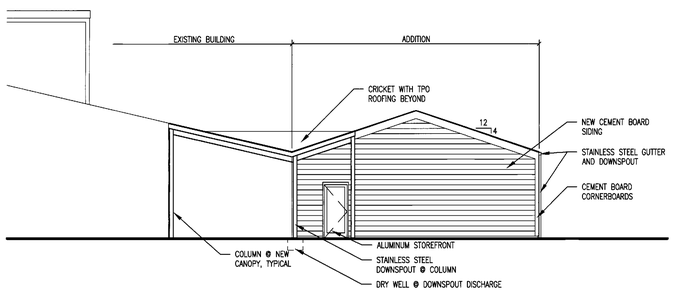

4 A2.1 **BUILDING ELEVATION**
1/8" = 1'-0"

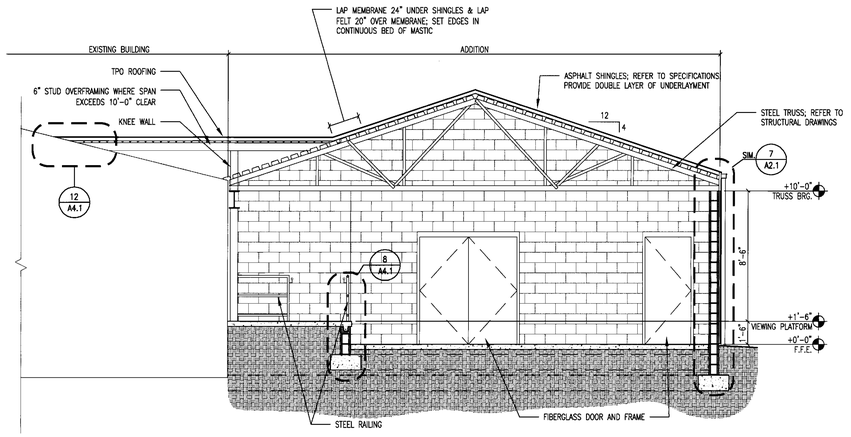

5 A2.1 **BUILDING SECTION**
1/4" = 1'-0"

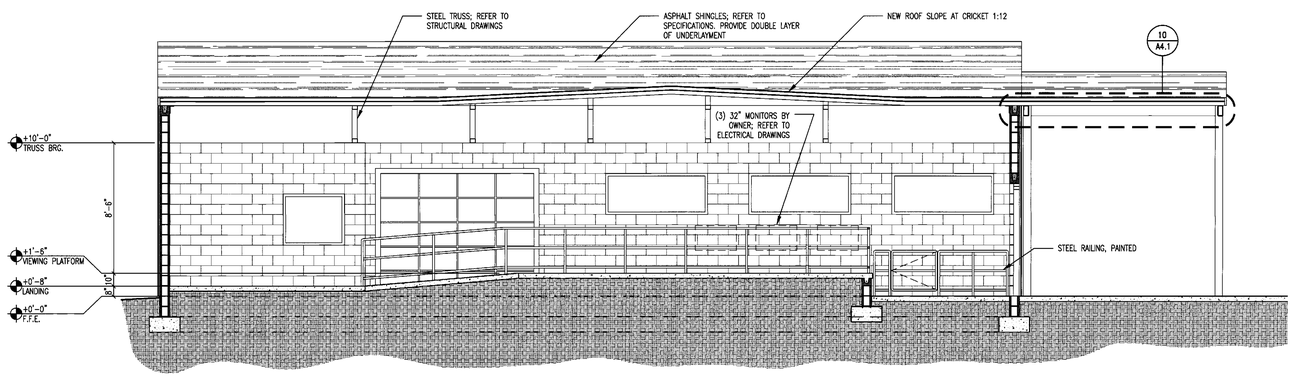

6 A2.1 **BUILDING SECTION**
1/4" = 1'-0"

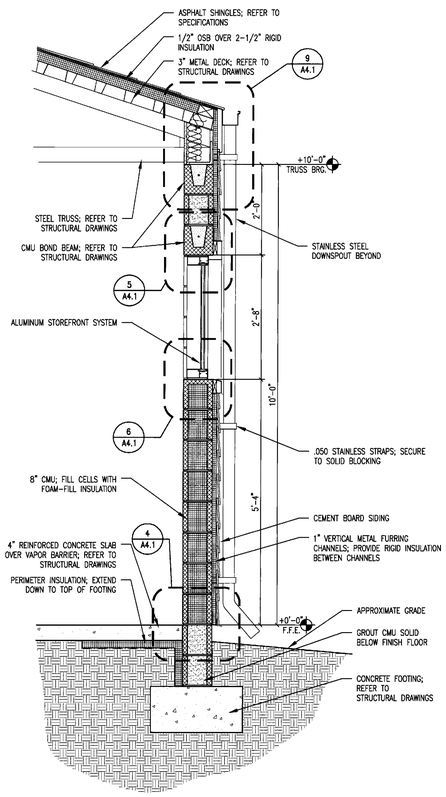

7 A2.1 **TYPICAL WALL SECTION**
3/4" = 1'-0"

NORTH·CAROLINA AQUARIUM
On Roanoke Island

ROANOKE ISLAND AQUARIUM TURTLE REHABILITATION CENTER

374 AIRPORT ROAD
MANTEO, NORTH CAROLINA 27954

COMPLETE FACILITIES SOLUTIONS

MOSER MAYER PHOENIX ASSOCIATES, PA

328 E. Market Street
Suite 200
Greensboro, N.C. 27401
Telephone 336-373-9800
Fax 336-373-0077

JOSEPH ALAN CHRISTIAN — REGISTERED ARCHITECT — GREENSBORO, N.C.
MOSER MAYER PHOENIX ASSOCIATES, P.A. — CERT. NO. 361 — NORTH CAROLINA — GREENSBORO, N.C.
4-13-12

THIS DRAWING IS THE PROPERTY OF MOSER MAYER PHOENIX ASSOCIATES P.A. AND IS NOT TO BE COPIED OR REPRODUCED IN PART OR WHOLE WITHOUT PERMISSION.

SCO ID# 10-08584-01A

REVISIONS

NO.	DATE	DESCRIPTION
	-	-

DATE	04-13-2012
PROJECT NUMBER	11007.01
SCALE	AS NOTED
DRAWN BY	EKH
CHECKED BY	JAC

ROOF PLAN, ELEVATIONS & SECTIONS

A2.1

Published in Build

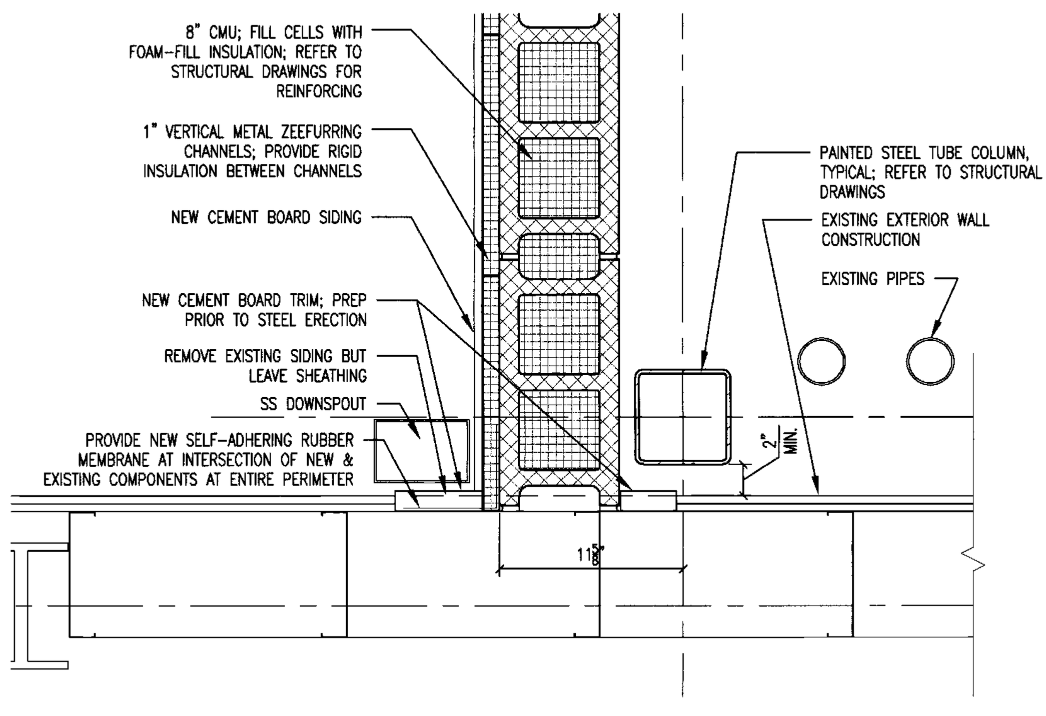

1 A4.1 PLAN DETAIL
1 1/2" = 1'-0"

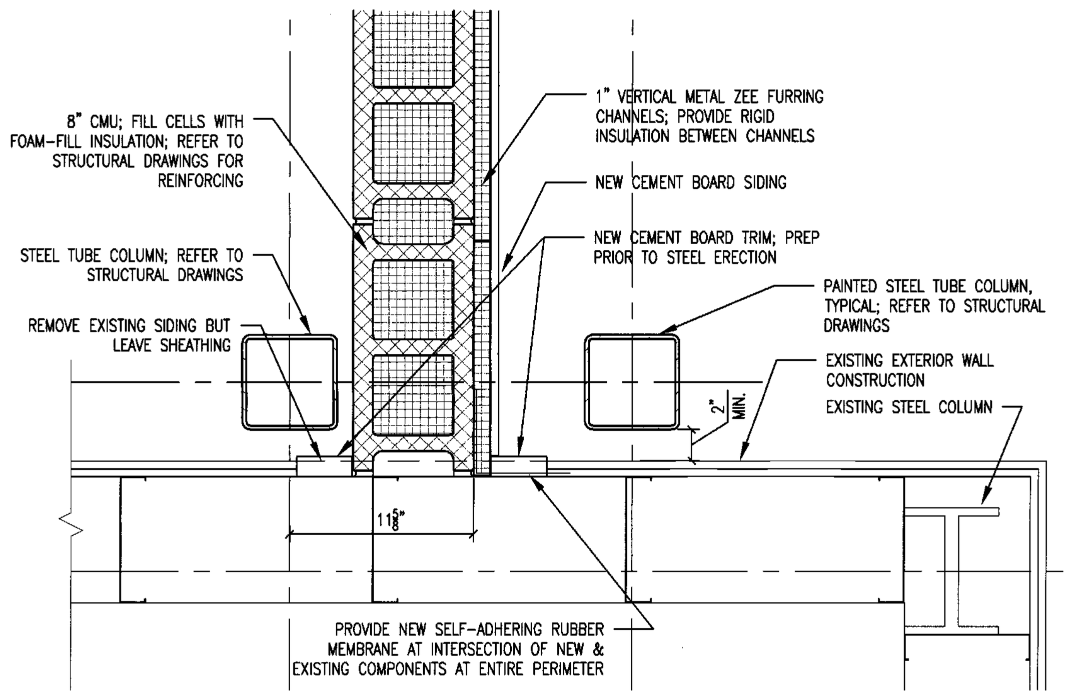

2 A4.1 PLAN DETAIL
1 1/2" = 1'-0"

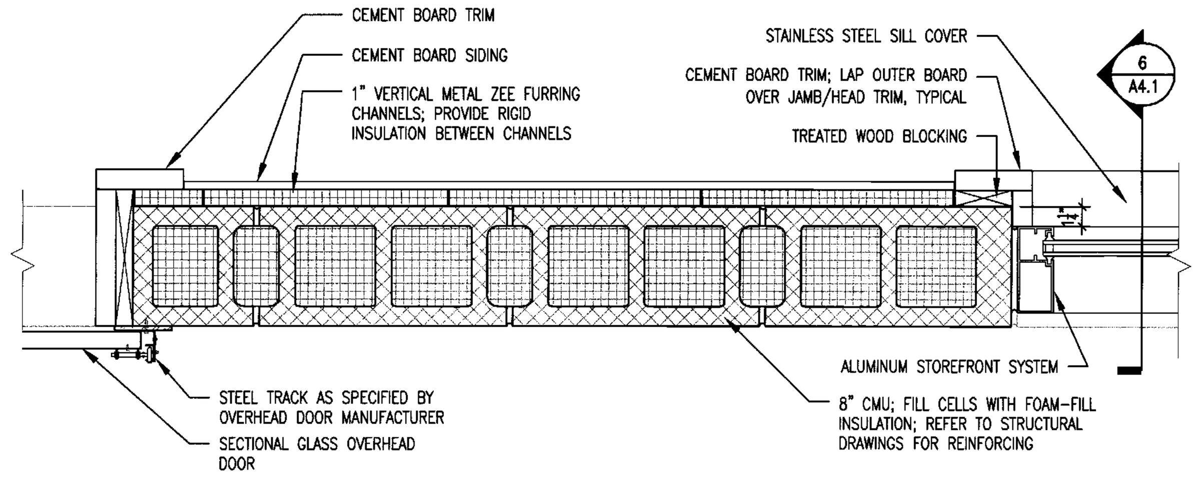

3 A4.1 PLAN DETAIL @ OPENINGS
1 1/2" = 1'-0"

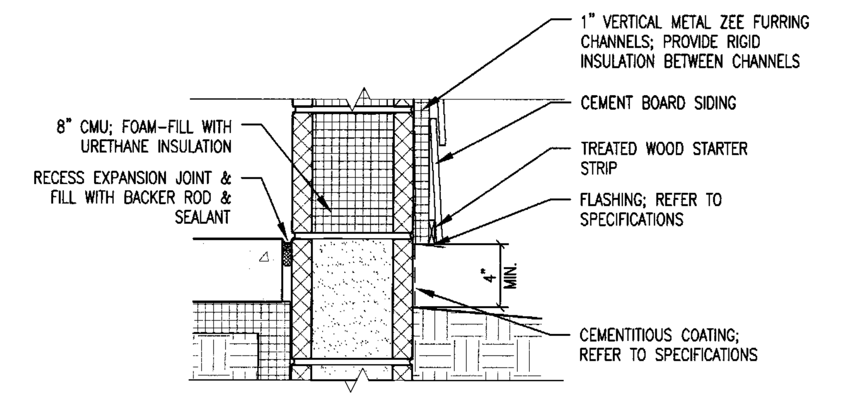

4 A4.1 DETAIL @ WALL BASE
1 1/2" = 1'-0"

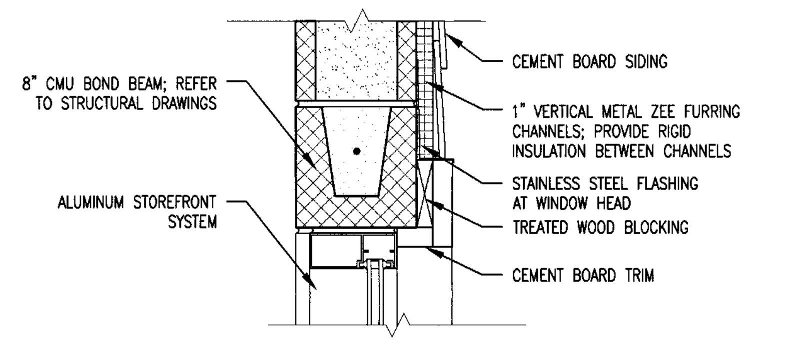

5 A4.1 TYPICAL DETAIL @ WINDOW HEAD
NOTE: JAMB CONFIGURATION SIMILAR. 1 1/2" = 1'-0"

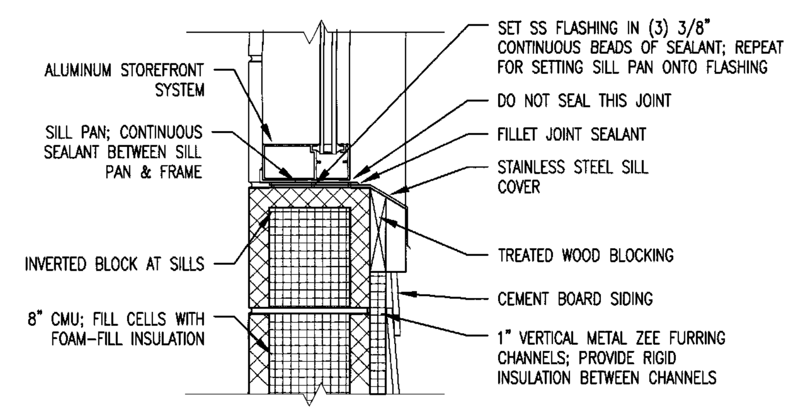

6 A4.1 TYPICAL DETAIL @ WINDOW SILL
1 1/2" = 1'-0"

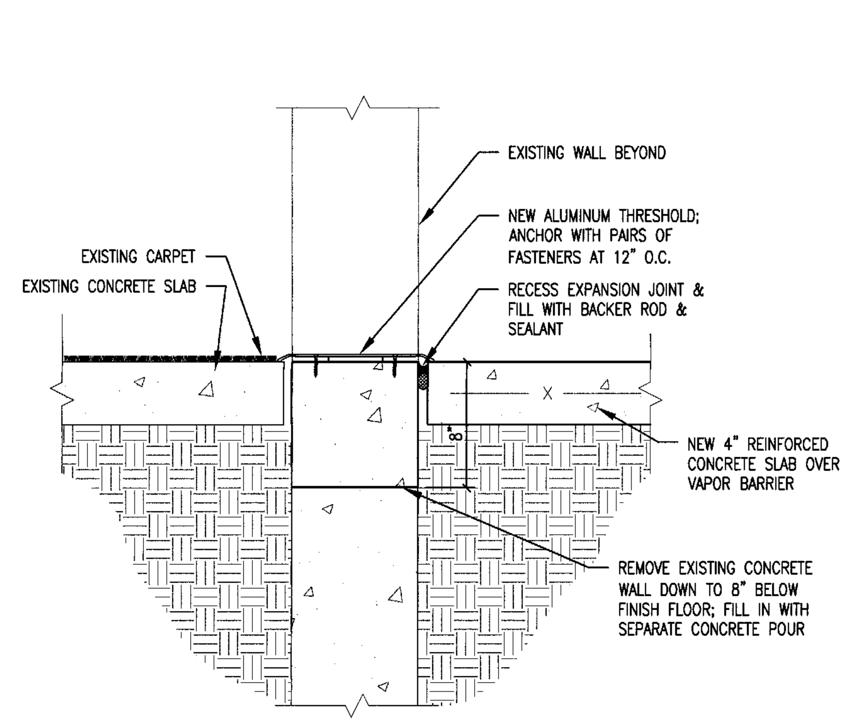

7 A4.1 DETAIL @ NEW DOOR IN EXISTING WALL
1 1/2" = 1'-0"

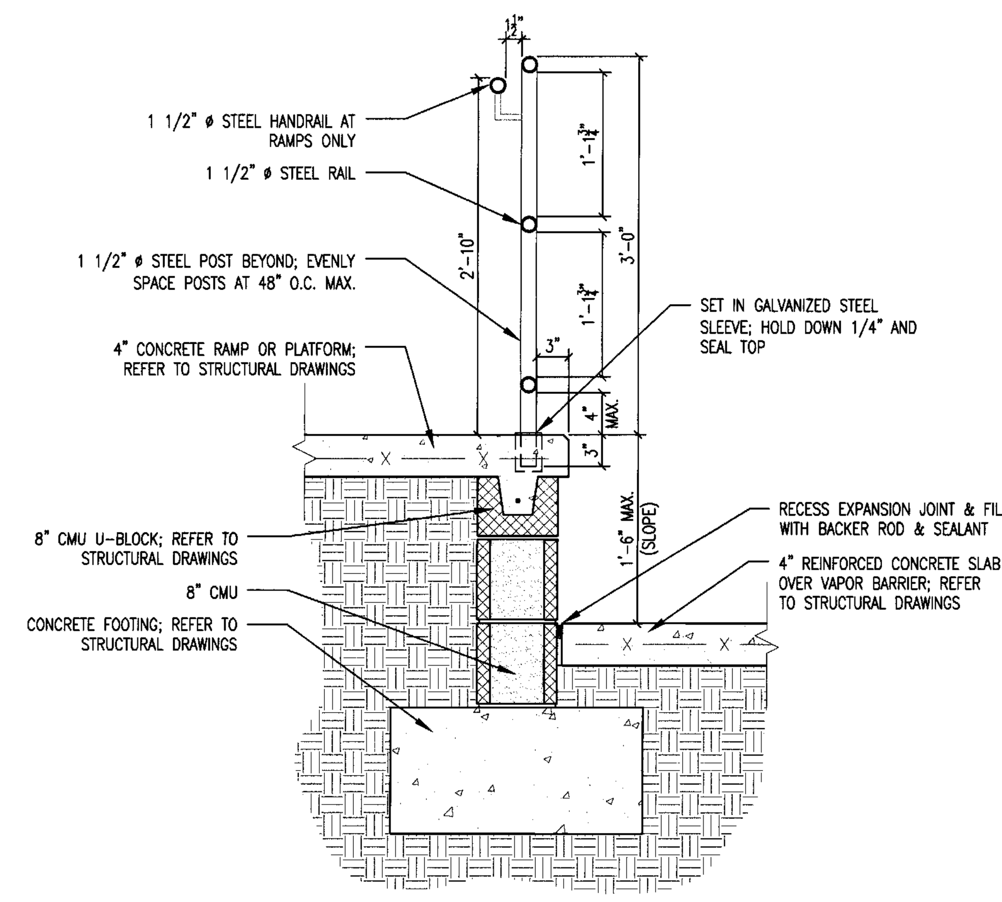

8 A4.1 DETAIL @ RAMP/PLATFORM EDGE
1 1/2" = 1'-0"

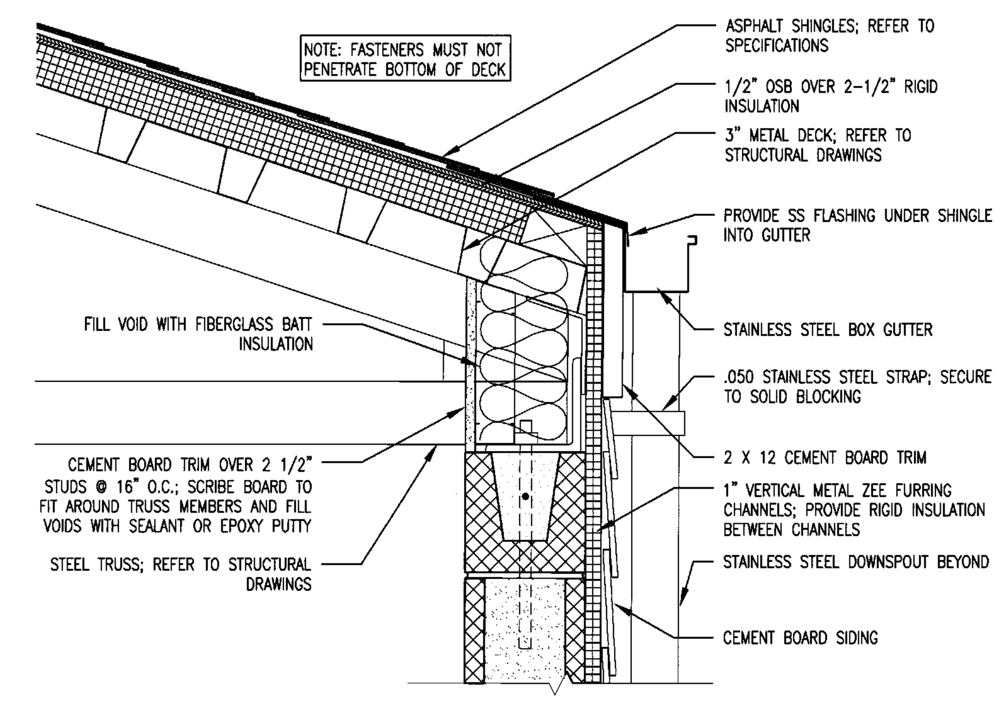

9 A4.1 TYPICAL DETAIL @ ROOF EDGE
PROVIDE AT ALL SIMILAR CONDITIONS 1 1/2" = 1'-0"

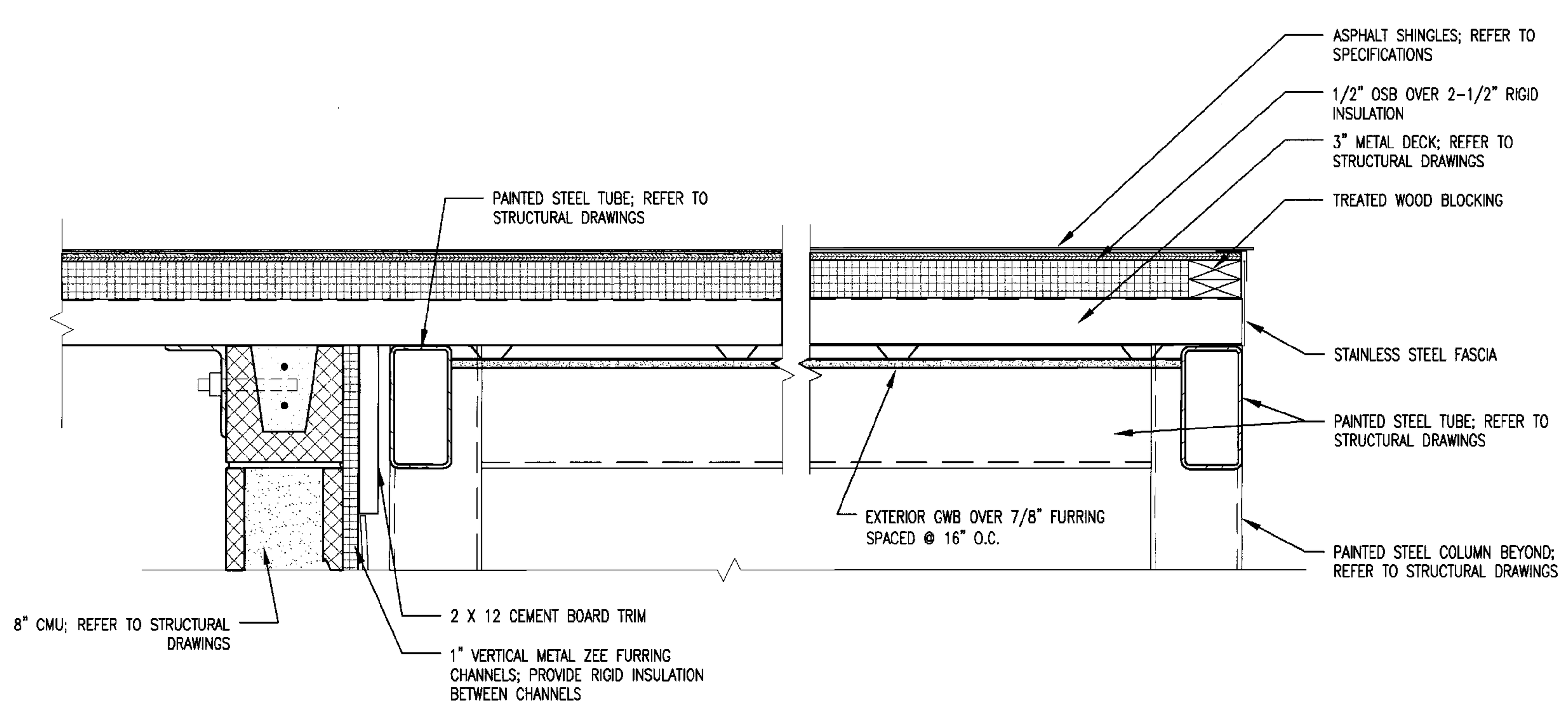

10 A4.1 DETAIL @ CANOPY
1 1/2" = 1'-0"

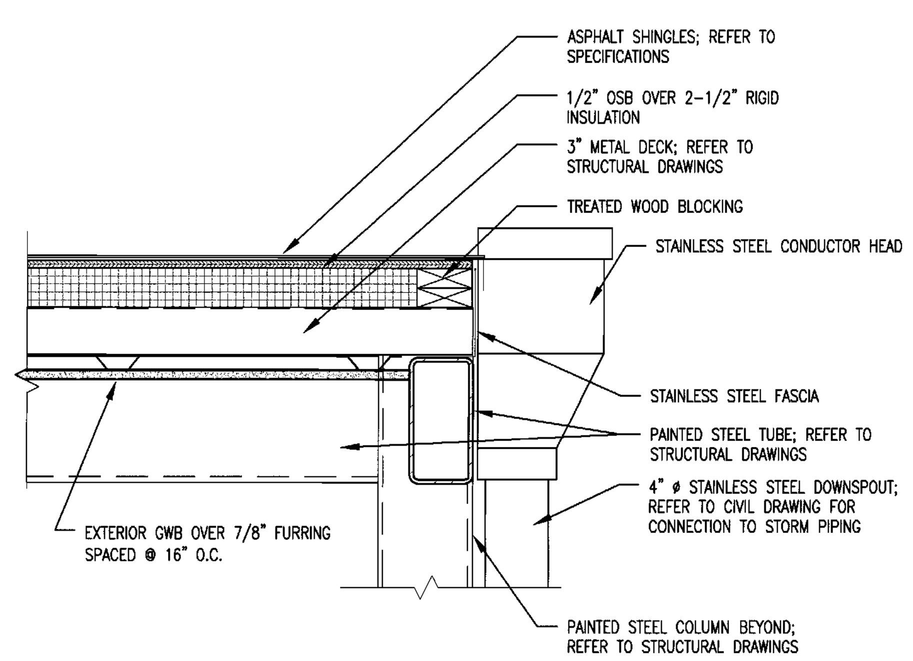

11 A4.1 DETAIL @ CONDUCTOR HEAD
1 1/2" = 1'-0"

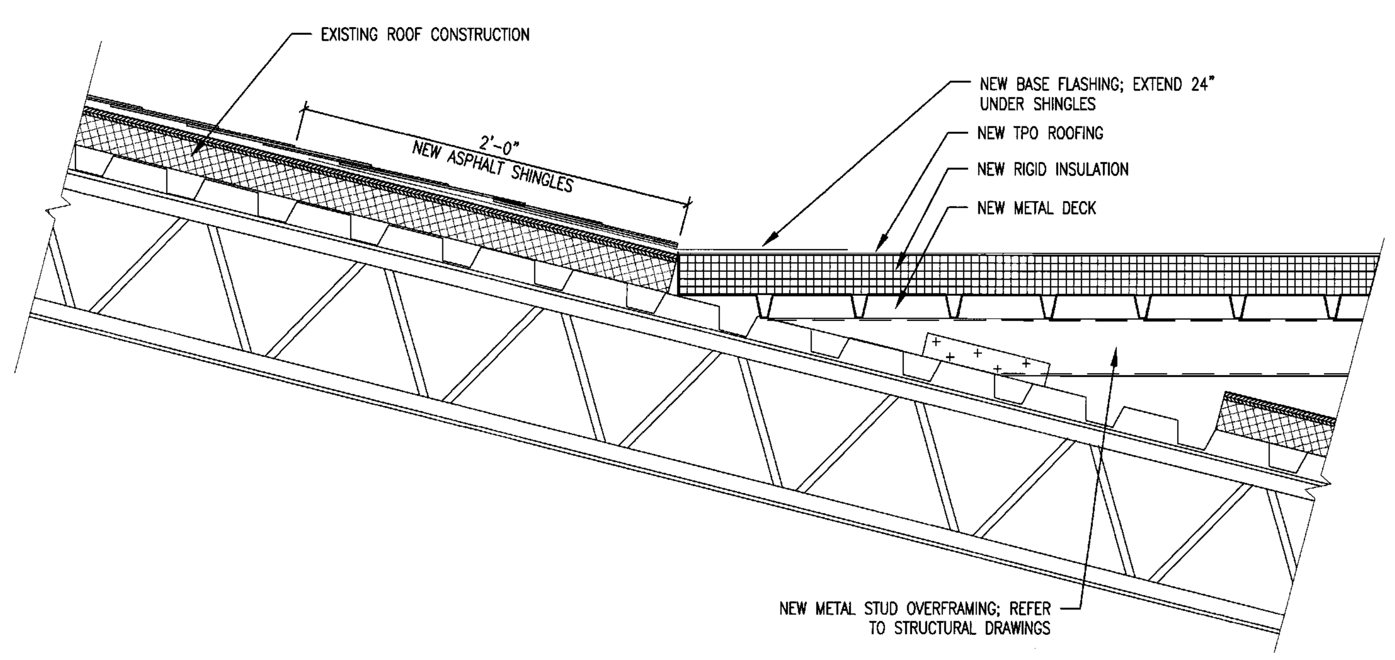

12 A4.1 DETAIL @ EXISTING ROOF CONNECTION
1 1/2" = 1'-0"

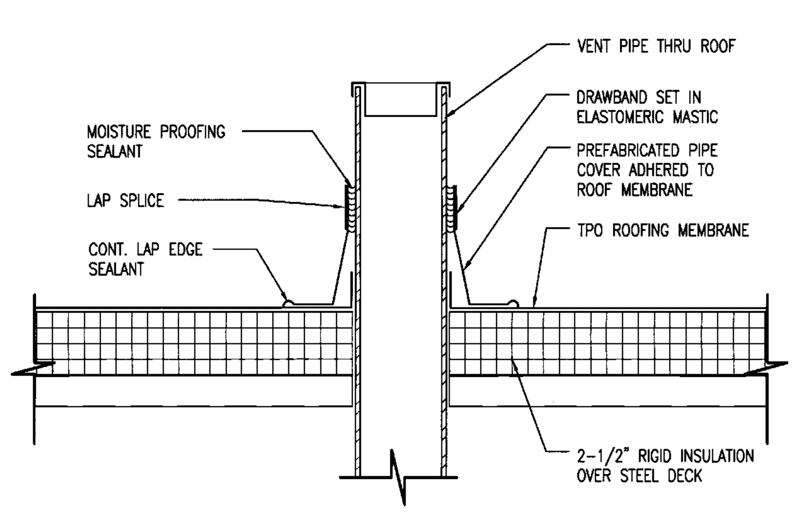

13 A4.1 VENT DETAIL @ TPO ROOFING
1 1/2" = 1'-0"

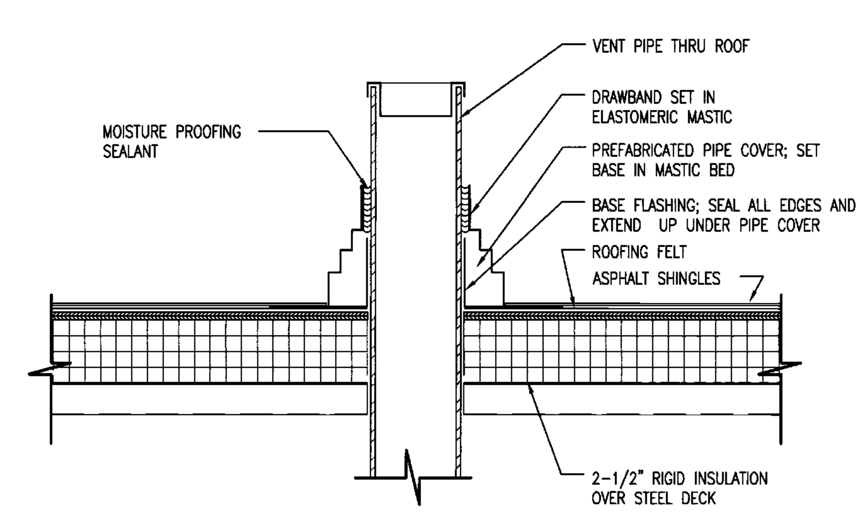

14 A4.1 VENT DETAIL @ SHINGLES
1 1/2" = 1'-0"

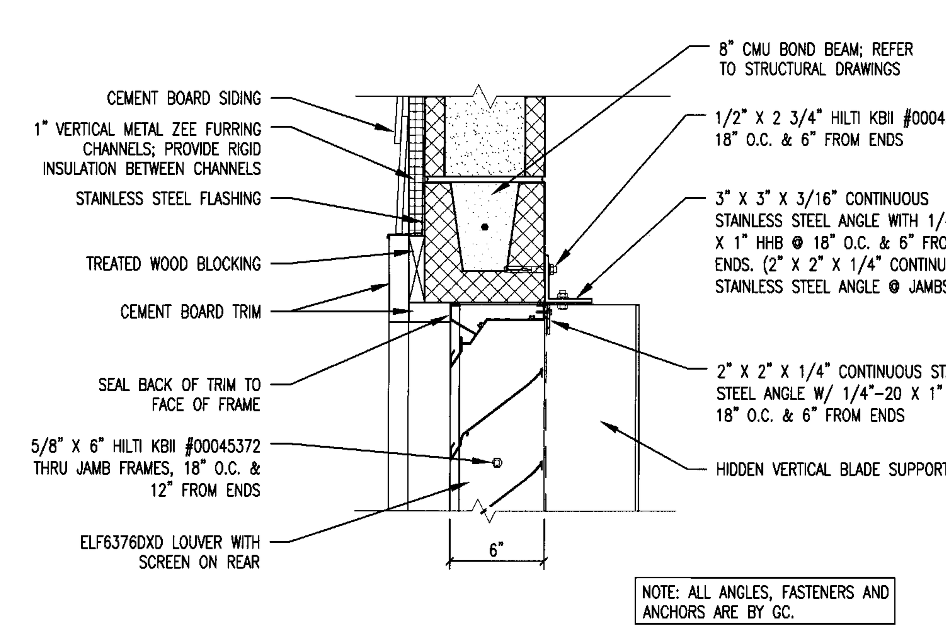

15 A4.1 DETAIL @ MECH. LOUVER HEAD
NOTE: JAMB CONFIGURATION SIMILAR. 1 1/2" = 1'-0"

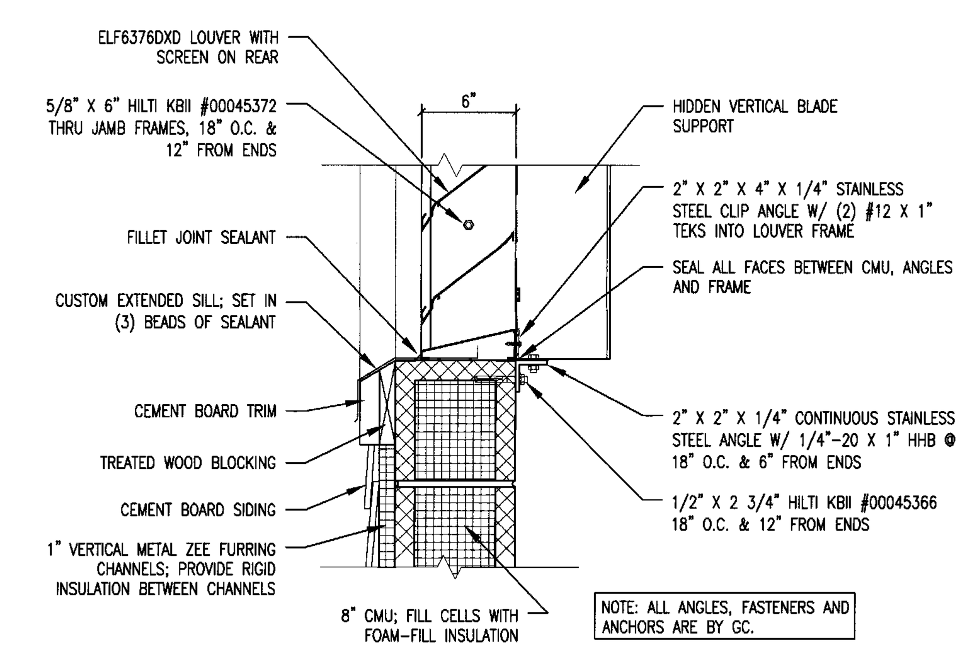

16 A4.1 DETAIL @ MECH. LOUVER SILL
1 1/2" = 1'-0"

NORTH·CAROLINA AQUARIUM On Roanoke Island

ROANOKE ISLAND AQUARIUM TURTLE REHABILITATION CENTER

374 AIRPORT ROAD
MANTEO, NORTH CAROLINA 27954

COMPLETE FACILITIES SOLUTIONS

MOSER MAYER PHOENIX ASSOCIATES, PA
328 E. Market Street
Suite 200
Greensboro, N. C. 27401
Telephone 336-373-9800
Fax 336-373-0077

JOSEPH ALAN COX REGISTERED ARCHITECT 7251 NORTH CAROLINA GREENSBORO N.C.
MOSER MAYER PHOENIX ASSOCIATES P.A. REGISTERED ARCHITECTURAL CORPORATION CERT. NO. 361 NORTH CAROLINA GREENSBORO N.C.
4-13-12

THIS DRAWING IS THE PROPERTY OF MOSER MAYER PHOENIX ASSOCIATES, P.A. AND IS NOT TO BE COPIED OR REPRODUCED IN PART OR WHOLE WITHOUT PERMISSION.

SCO ID# 10-08584-01A

REVISIONS

NO.	DATE	DESCRIPTION
-	-	-

DATE	04-13-2012
PROJECT NUMBER	11007.01
SCALE	AS NOTED
DRAWN BY	EKH
CHECKED BY	JAC

DETAILS

A4.1

Published in iBuild